HENDRICKSON

ABN 21 004 992 769

HENDRICKSON ASIA PACIFIC
WARRANTY REGISTRATION

Thank you for selecting Hendrickson as your choice of trailer suspension.

To assist you in gaining maximum benefit and serviceability from your new Hendrickson suspension, we have included the following information:

Maintenance
The trailer maintenance booklet provides details of the regular maintenance schedule.

Warranty Document
The warranty statement enclosed provides an outline of the various Hendrickson warranties.

Registration Form
Please complete this form and return to us as soon as the trailer is registered. This is our record of your purchase and will assist us both greatly if required in the future.

Please enjoy the performance of our suspension, and once again

Thank you for your choice.

Yours sincerely,

JOHN STEWART
Executive Manager, Sales & Marketing

Service Contact
1300 130 960

Hendrickson Asia Pacific Pty Ltd
32-44 Letcon Drive, Dandenong South 3175
PO Box 1063
Dandenong, Victoria 3175 Australia
Ph: +61 3 8792 3600 Fax: +61 3 8792 3699
www.hendrickson.com.au

Ref: AUS-97114-006

HENDRICKSON
Asia Pacific Pty Ltd
ABN 21 004 992 769

TRAILER SUSPENSION WARRANTY REGISTRATION

AUSTRALASIA

The Hendrickson team is committed to providing you with unsurpassed support for this product.
Please complete this registration form and forward it to Hendrickson Asia Pacific at the address as listed below.

Only one registration form per trailer is required providing all the details are contained herein.

In the unlikely event of there being a fault with this product, the provided information will assist us in expediting any repairs required and therefore minimizing any downtime.

Thank you for choosing Hendrickson as your suspension.

OPERATOR DETAILS

NAME:	STREET:	SUBURB:
POST CODE:	CONTACT NAME:	TELEPHONE:
E-MAIL:	OTHER:	

TRAILER DETAILS

MANUFACTURER:		MODEL:	VIN NO:
BUILD DATE:	DATE INTO SERVICE:	TYPE: *Tipper, Tautliner etc*	APPLICATION: *Linehaul, Logging etc*
FLEET NO:	REGO NO:	TYRE MAKE:	TYRE SIZE:

SUSPENSION DETAILS

SUSPENSION TYPE: *Intraax, HT230 etc*	BRAKES: *Std / Disc / HXS / 8⅝*	OTHER:
SERIAL NO – AXLE 1:	SERIAL NO – AXLE 2:	SERIAL NO – AXLE 5:
SERIAL NO – AXLE 3:	SERIAL NO – AXLE 4:	SERIAL NO – AXLE 6:

DOCUMENTS RECEIVED

WARRANTY DOCUMENT: ☐ Yes ☐ No	MAINTENANCE MANUAL: ☐ Yes ☐ No	PARTS MANUAL: ☐ Yes ☐ No

If you have not received the above documents or require clarification, please contact the Dealer from whom you purchased this equipment.
Should you wish to obtain additional copies of the above documentation, please contact the Warranty Officer at Hendrickson Asia Pacific Pty Ltd.

UPON COMPLETION, PLEASE RETURN THIS FORM IN TO:

Warranty Registration
HENDRICKSON ASIA PACIFIC PTY LTD
PO Box 1063, Dandenong, Victoria, 3175, Australia.

Telephone: +61 3 8792 3600 Fax: +61 3 8792 3699 Email: technicalservice@hendrickson.com.au

Visit our Web Site at: www.hendrickson.com.au

SECTIONS BELOW ARE FOR HAPPL USE ONLY		
Received:	Checked By:	Entered:

HENDRICKSON Intraax Maintenance Schedule

Service Interval	Inspect Ride Height	Shock Absorber	Air Spring	Height Control Valve	Frame Hanger	Wear Washers	Tri-functional Bush /Pivot Connection	S-Cam	Slack Adjuster	Disc Brakes [4]	Drum Brakes [1]	Wheel Ends [2]
Predelivery	I	I	I	I	I	I	I	L	L/A	I	I	
30 Days	I	I	I	I	I	I	I/C	L	L/A	I	I	I
1st Quarter	I	I	I	I	I	I	I	L	L/A	I	I	
2nd Quarter	I	I	I	I	I	I	I	L	L/A	I	I	I
3rd Quarter	I	I	I	I	I	I	I	L	L/A	I	I	
4th Quarter	I	I	I	I	I	I	I	L	L/A	I/R	I/R	I
Year 1												
1st Quarter	I	I/C	I	I/C	I	I	I/C	L	L/A	I	I	
2nd Quarter		I/R	I	I	I	I	I	L	L/A	I	I	I
3rd Quarter	I	I	I	I	I	I	I	L	L/A	I	I	
4th Quarter	I	I	I	I	I	I	I	L	L/A	I/R	I/R	I
Year 2												
1st Quarter	I	I/C	I	I/C	I	I	I	L	L/A	I	I	
2nd Quarter		I	I	I	I	I	I	L	L/A	I	I	I
3rd Quarter	I	I/R	I	I	I	I	I	L	L/A	I	I	
4th Quarter		I	I	I	I	I	I	L	L/A	I/R	I/R	I
Year 3												
1st Quarter	I	I/C	I	I/C	I	I	I	L	L/A	I	I	
2nd Quarter		I	I	I	I	I	I	L	L/A	I	I	I
3rd Quarter	I	I	I	I	I	I	I	L	L/A	I	I	
4th Quarter		I/R	I	I	I	I	I	L	L/A	I/R	I/R	I
Year 4												
1st Quarter	I	I/C	I	I/C	I	I	I	L	L/A	I	I	
2nd Quarter		I	I	I	I	I	I	L	L/A	I	I	I
3rd Quarter	I	I	I	I	I	I	I	L	L/A	I	I	
4th Quarter		I	I	I	I	I	I	L	L/A	I/R	I/R	I
Year 5												
1st Quarter	I	I/R	I	I/R	I	I	I	L	L/A	I	I	
2nd Quarter		I	I	I	I	I	I	L	L/A	I	I	I
3rd Quarter	I	I	I	I	I	I	I	L	L/A	I	I	
4th Quarter		I	I	I	I	I	I	L	L/A	I/R	I/R	I

NOTES

1. Minimum allowable brake lining thickness - 6mm
2. Maximum allowable end play: .001" - .005"
3. Use Castrol APXT
4. Minimum disc pad thickness = 11mm
   (9mm back plate / 2mm lining)
   Minimum rotor thickness = 37mm

KEY	
I	Inspect
I/R	Inspect/ Replace as required
I/C	Inspect/Check Torques
L/A	Lubricate/Check Adjustment
L	Lubricate [3]

NOTE: Maintenance intervals may vary depending on conditions. Refer to service literature for more information.

HENDRICKSON®

DDI_803_2022.

COVERAGE TABLE

The general coverage period of 12 months / unlimited kilometres apply when the suspension is used in the recommended application and within the rated capacities.
Coverage may differ on some items used in applications for which special written approval was granted.
For more warranty coverage information contact the Hendrickson Customer Service Centre on **+61 3 8792 3600.**

ADDITIONAL WARRANTY COVERAGE INFORMATION

Wearing items such as wear pads and shock absorbers that are designed to be replaced periodically to ensure optimum suspension operation shall be warranted under the relevant spare parts policy.

Some components may contain extended coverage offered by suppliers and/or manufacturers, Please contact your selling dealer for the full warranty coverage applicable to your suspension.

Coverage may differ on some items used in applications for which special written approval was granted.

If you have any questions about the information contained herein, please contact the Hendrickson Customer Service Excellence Centre on **+61 3 8792 3600.**

WARRANTY CLAIM CONSIDERATIONS

- **SYSTEM PROBLEMS OR PARTS FAILURES THAT RESULT FROM IMPROPER INSTALLATION ARE THE RESPONSIBILITY OF THE INSTALLER OF THE SUSPENSION.**
- **DO NOT DESTROY THE PARTS BEING CONSIDERED FOR WARRANTY!**
  All failed parts must be held by the repairer for 90 days from the date of repair, or until the claim is settled. Failed parts are to be returned only upon Hendrickson's request and must be accompanied by a Warranty Return Number (WRN).

CALL

1300 130 960

For your nearest Hendrickson Parts & Service Dealer

HENDRICKSON®

WARRANTY CONDITIONS

Hendrickson Asia Pacific (Hendrickson) warrants that suspensions shall be free of defects in material or workmanship. This warranty coverage only applies to those suspensions that have been correctly assembled and installed by approved installers, correctly maintained, and used in the recommended application. All non-recommended suspension applications must receive written approval from Hendrickson in order to be covered under this warranty. This warranty is subject to the conditions, exclusions and limitations listed below.

- Parts to be returned under a warranty claim must be accompanied by the Warranty Return Number ***(WRN)*** issued by the Hendrickson Customer Excellence Centre.
- Hendrickson will not accept the alleged defective part for return unless specifically requested. Any part returned will be at the express instructions of Hendrickson and accompanied by the correct paperwork quoting their WRN (Warranty Return Number).
- Claims will be denied if either parts do not conform to this policy, are tested within specifications or signs of contamination are present.
- Freight will only be covered if Hendrickson's nominated carrier is used.
- Only genuine Hendrickson parts, or parts sold through Hendrickson, may be used to repair Hendrickson suspension systems.
- Labour allowances will be at the Standard Repair Times.
- Labour considerations are only available to approved Hendrickson Repairers.
- Hendrickson has the sole discretion and authority to accept or reject a warranty claim.

Hendrickson is not responsible for any additional costs that may be incurred when replacement parts or materials are not acquired through the Hendrickson distribution network.

COVERAGE

The Hendrickson suspension warranty coverage begins when the suspension enters service and ends when the time or distance is reached.

The warranty shall not apply to or include any repair or replacement as a result of the following conditions:

- Accident, fire or other casualty.
- Misuse or negligence including, but not limited to, overloading.
- Lack of reasonable and proper maintenance.
- Repairs improperly performed or replacements improperly installed.
- Use of component parts, replacement or otherwise, that are not manufactured or distributed by Hendrickson.
- Modifications not recommended or approved by Hendrickson *(in writing)*.
- Applications outside published guidelines or approval under the Hendrickson application approval system
- Uses other than intended by Hendrickson Asia Pacific Pty Ltd and Normal wear and deterioration occasioned by the use of the suspension system.

The liability of Hendrickson under this warranty is limited solely to the repair or replacement of defective material or workmanship by an authorised person. Hendrickson shall not be liable for repairs performed by any unauthorised persons. This warranty does not include any expense of or related to transportation of the parts to or from the place where the repair is to be performed or compensation for inconvenience or loss of use while the suspension system is being repaired. Hendrickson shall not be liable for any expense, loss or damage ***(direct, incidental, consequential or exemplary – including, but not limited to, towing expenses, downtime expenses, cargo damage, incidental charges or any other losses arising in connection with the sale, use or inability to use the suspension system)*** resulting from the warranty-covered part found to be defective.

No expressed warranty is given by Hendrickson with respect to its suspension system except as specifically set forth herein. Any warranty implied by law, including any warranty of merchantability or fitness for a particular purpose, is limited to the expressed warranty term.

HENDRICKSON

GENERAL SUSPENSION WARRANTY

No: 97117-113
Subject: *General Warranty Statement*
Date: January 2022

For Inclusion In Warranty Registration Pack

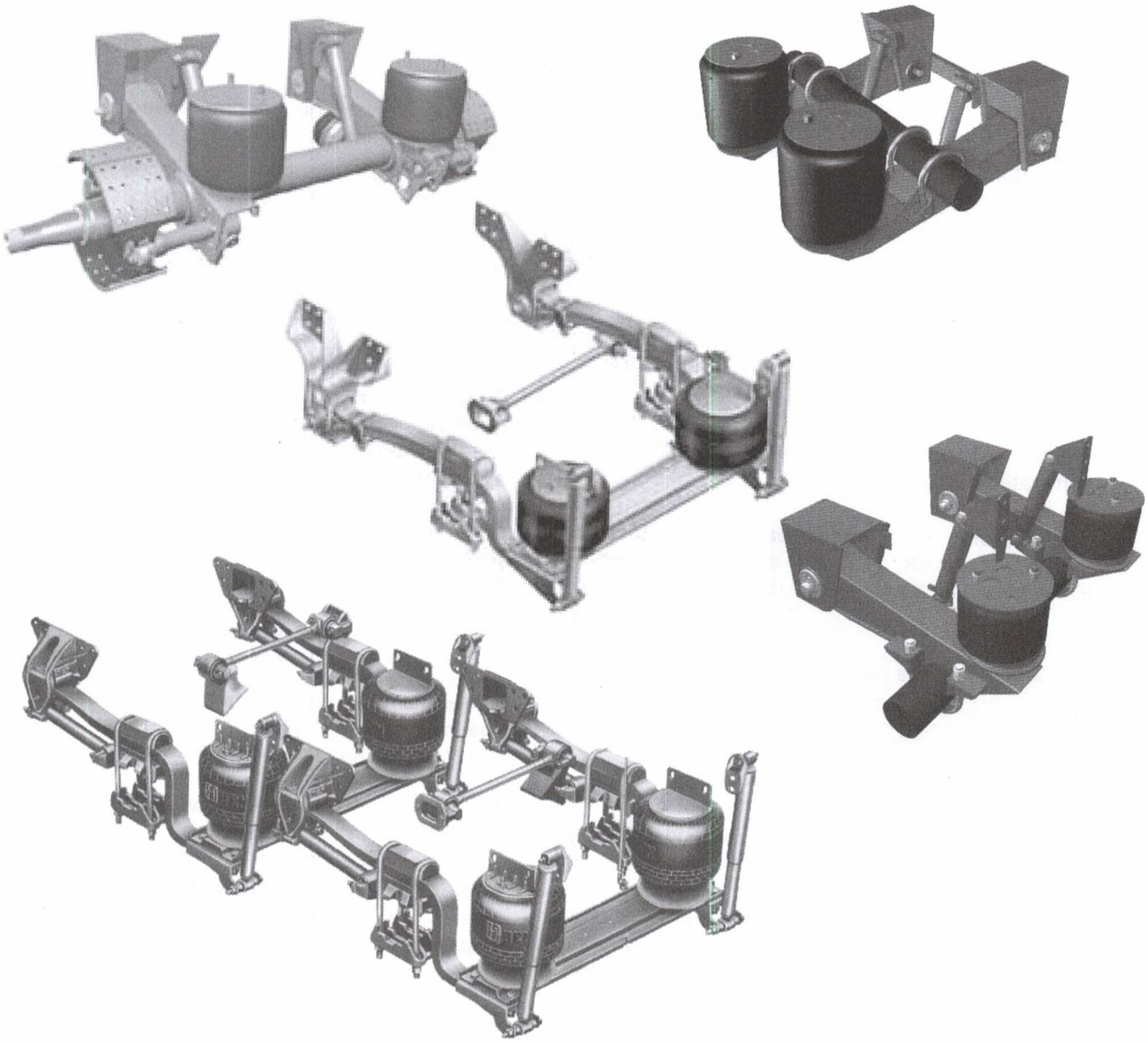

BOLER COMPANY
COPYRIGHT ©2003
HENDRICKSON ASIA PACIFIC PTY LTD
ALL RIGHTS RESERVED

HENDRICKSON
ABN 21 004 992 769
32-44 Letcon Drive, Dandenong South
PO Box 1063, Dandenong, Victoria 3175 Australia
Phone:+61 3 8792 3600 Fax:+61 3 8792 3699
www.hendrickson.com.au

TECHNICAL PROCEDURE

TRAILER SUSPENSION SYSTEMS

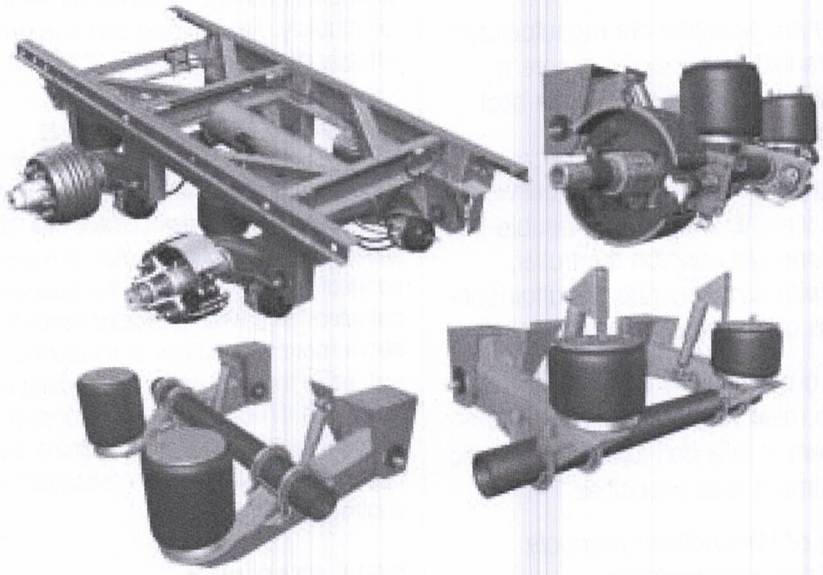

TABLE OF CONTENTS

INTRODUCTION 2

FEATURES 2
- TRI-FUNCTIONAL® BUSHING 2
- Rigid-Axle Connection 2
- Roll Stability 2
- Soft Riding 2
- Load Control 2
- Durability 2

RIDE HEIGHT 3
- Factors Affecting Ride Height 3

CENTER LIFT SUSPENSIONS 5

AIR CONTROL SYSTEM 6
- Height Control Valve 6
- Air Dump Valves 6

PERIODIC INSPECTION SCHEDULE 7
- Original-Installation Inspections 7
- Daily Inspections 7
- 30-Day Inspection 7
- 90-Day Inspection 7
- QUIK-ALIGN® Inspection 7
- Wheel End Maintenance 7

SUSPENSION SYSTEMS MAINTENANCE 8
- Ride Height Adjustment 8
- Air Spring 8
- Shock Absorber 8
- Pivot Connection 8
- TRI-FUNCTIONAL BUSHING 9

TROUBLESHOOTING: TRI-FUNCTIONAL BUSHING . 10
- Commonly Misdiagnosed Bushing Problems . 11

TORQUE SPECIFICATIONS 12

HENDRICKSON®

INTRODUCTION

Hendrickson Trailer Suspension Systems (Hendrickson) designs its suspension systems to safely provide a long life and low-maintenance operation. The suspensions exhibit excellent ride characteristics under all legal load conditions. Your suspension was chosen to give your trailer the best ride, the correct load-carrying capability, and the required amount of roll control for your vehicle.

Hendrickson trailer air suspensions are manufactured in modern, quality-oriented facilities. Great care is taken to ensure that our customers receive the best product value for their purchasing dollar.

Hendrickson trailer air suspension systems deliver durability with a light-weight, simple, and trouble-free design. The suspensions will cushion the trailer, cargo and the driver with a quality ride not attainable without a Hendrickson air-suspension system.

Hendrickson supplies a wide variety of trailer suspension designs to meet your application needs. Each suspension system is intended for use in specific applications with maximum load capacities.

For a complete listing of Hendrickson products, contact your Hendrickson representative.

HENDRICKSON SUSPENSION FEATURES

TRI-FUNCTIONAL® BUSHING

The TRI-FUNCTIONAL BUSHING (located at the suspension pivot) controls vehicle roll- and axle-alignment, yet allows easy up-and-down travel. It also controls forces generated by braking, accelerating and irregular road surfaces. Cavities located at top and bottom absorb vertical movement. Solid rubber molded around steel center sleeve absorbs horizontal and lateral movement. The cavities elongate to absorb forces as the vehicle turns and increase roll stability. The bushing and suspension pivot are virtually maintenance free.

RIGID-AXLE CONNECTION

The trailer axle is welded directly to the suspension beam. This design has no flexible connections, which may lead to maintenance or replacement due to instability. The HT series axle connection is also U-bolted. The INTRAAX® axle connection is integrated to the suspension beams with a patented "axle wrap"; circular welded to neutral axis. The beam mounting surface is machined and is continuously welded to the axle wrap, eliminating axle seats and U-bolts. The INTRAAX rigid-axle connection provides outstanding roll stability, maintains axle alignment to beam, and contributes to a straighter axle tube and controlled toe alignment.

ROLL STABILITY

The TRI-FUNCTIONAL BUSHING and rigid-axle connection result in a roll-stable installation. The trailer floor remains level, even when offset loading occurs, while using only one height control valve per trailer.

SOFT RIDING

The air springs and TRI-FUNCTIONAL BUSHINGS support the trailer load, while absorbing road shocks. This softer ride protects the driver, cargo and vehicle; it also provides longer vehicle life and greater driver comfort.

LOAD CONTROL

The single height control valve assures an evenly distributed load across all air-ride axles when properly installed. With the exception of tire deflection, the trailer's ride height remains constant whether loaded or unloaded.

DURABILITY

Hendrickson air suspensions and their components have been thoroughly tested to provide a long life that is virtually maintenance free. The sturdy construction of the trailer air suspensions has a history of proven durability.

RIDE HEIGHT

Ride height is the measurement from the suspension mounting surface to the center of the axle. All Hendrickson air suspensions are designed to operate at a specific ride height. Care must be taken to ensure the correct loaded suspension ride height is maintained throughout the trailer's usage.

To determine the ride height of your Hendrickson trailer suspension, locate the suspension ID tag on the front of the HT frame bracket, the front crossmember of the HS slider box or on the inside of the suspension beam on an INTRAAX®. Check the indicated (bold) number in the following examples to find the designed ride height.

HT model: HT230-**14**-001
HS model: HS190T-**14**-4801A
INTRAAX model (early): AA230TBA..1 **14**A1A01...
INTRAAX description (current): B**15**U71.5...

Changes in ride height affect the air spring height, which in turn, changes the suspension's load carrying capabilities. To provide an equal loading of the axles, Hendrickson trailer suspensions are intended to be used at ride heights which maintain equal air spring heights throughout the application.

Operating a suspension at an incorrect ride height can result in improper loading and can shorten the service life of the suspension. Hendrickson is not responsible for components which fail due to incorrect ride height settings.

FACTORS AFFECTING RIDE HEIGHT

The following features need to be considered when determining ride height:

FRAME-TO-GROUND HEIGHT

The height from the bottom of the trailer frame (or suspension mounting surface) to the ground must be determined at each suspension location (Figure 1). This dimension provides the desired trailer deck height.

TRAILER DECK HEIGHT

The suspension ride height is calculated by subtracting the LOADED tire radius from the LOADED frame-to-ground height. The radius of the tire will decrease as the trailer is loaded due to tire deflection, which in turn, affects the trailer deck height (Figure 2).

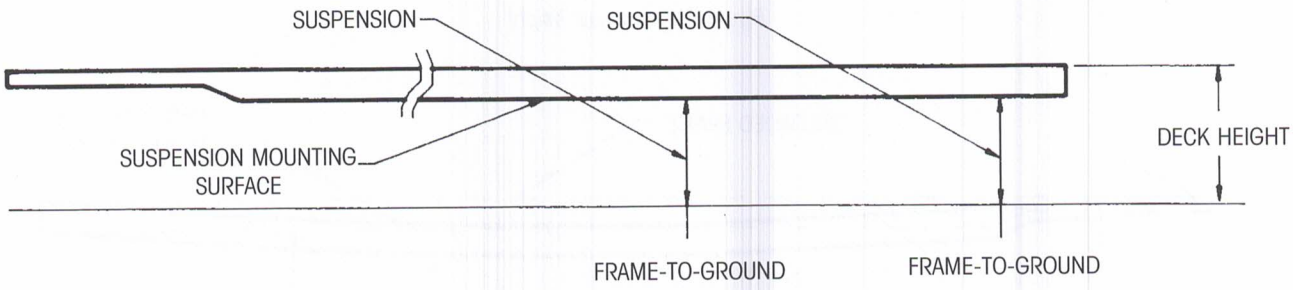

Figure 1. Frame-to-ground-height

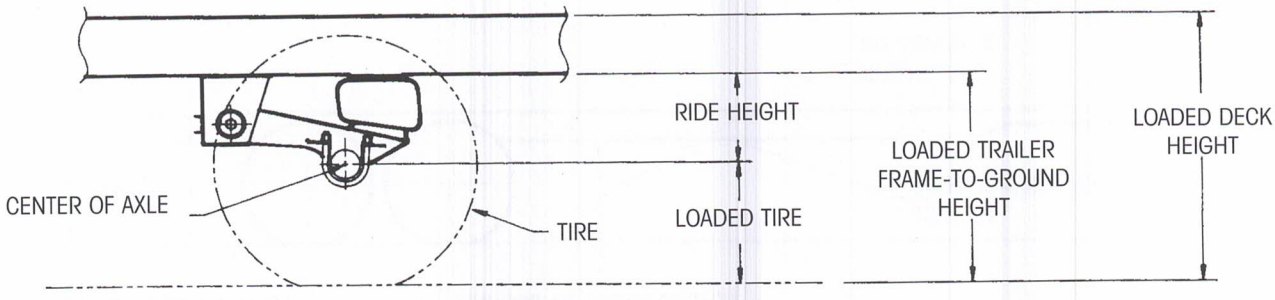

Figure 2. Trailer deck height

FIFTH WHEEL HEIGHT

The tractor fifth wheel affects the height of the trailer frame. (For example: a low fifth wheel height would cause the trailer frame to slope downward.) Variations in the fifth wheel height will result in variations of suspension ride heights.

The correct suspension ride height must be determined at each suspension location (Figure 3). When ride height variations are required, consult the Hendrickson Trailer Engineering Department to evaluate load equalization capabilities.

FRAME DEFLECTION

Deflection of the trailer frame when loaded must be considered. Frame deflection will result in a suspension ride height different from the installed ride height. The correct suspension ride height must be determined at each suspension location (Figure 4). When ride height variations are required, consult the Hendrickson Trailer Engineering Department to evaluate load equalization capabilities.

FRAME-TO-GROUND HEIGHT (CENTER LIFT AXLES)

The height of the bottom of the trailer frame (or suspension mounting surface) from the ground must be determined at each suspension location (Figure 5). This dimension must provide the desired LOADED deck height.

A leaf spring suspension's ride height will change under various loads. The auxiliary air suspension's ride height must be specified to match the loaded leaf spring suspension's ride height.

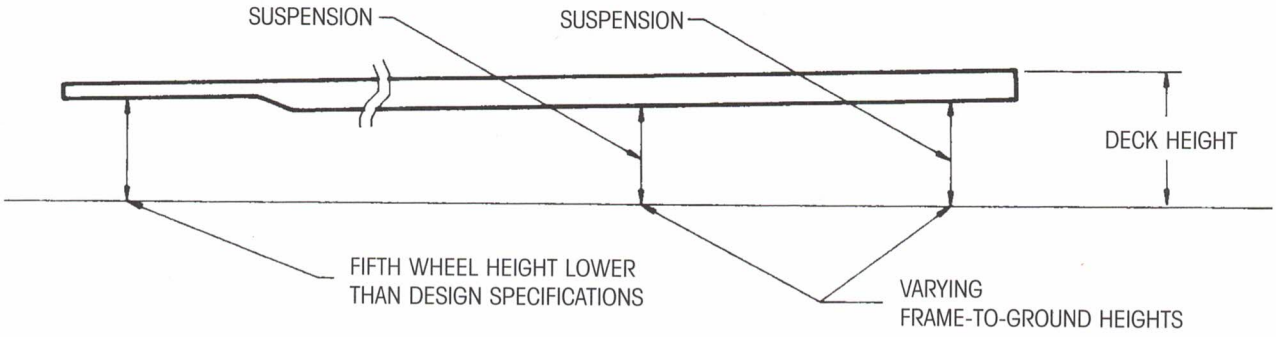

Figure 3. Fifth wheel height

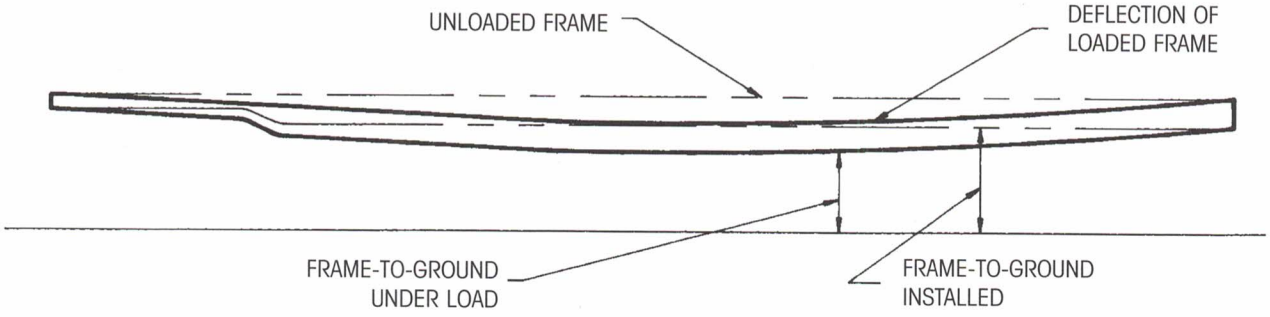

Figure 4. Frame deflection

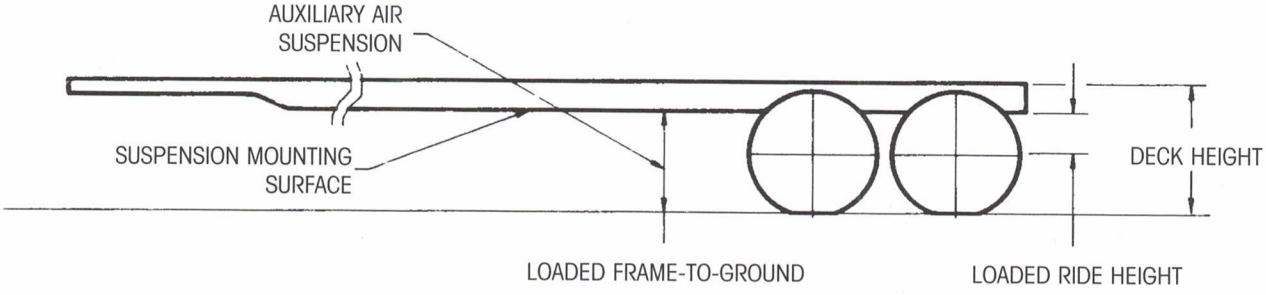

Figure 5. Frame-to-ground height (center lift axle)

SUSPENSION TRAVEL

Hendrickson Trailer Suspension Systems uses these terms to define the suspension travel:

Jounce — Maximum amount of upward axle movement allowed by the suspension (Figure 6).

Rebound — Maximum amount of downward axle travel allowed by the suspension (Figure 6).

When selecting a suspension, the amount of axle travel must be considered in both the loaded and unloaded conditions. Unloaded, the suspension rebound must not be less than 2″.

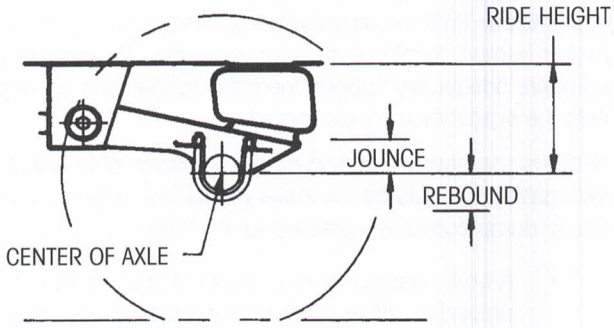

Figure 6. Suspension travel

TIRE CLEARANCE

In selecting a suspension, the trailer's tire clearance must be used to determine the maximum suspension jounce permitted by the trailer design. Hendrickson specifies that the tire clearance above the jounce requirement must include one inch for the "HT" series and INTRAAX models (Figure 7). "T" series models require two inches of tire clearance above the specified jounce requirement. A two inch clearance is specified between the trailer frame and inside tire inboard sidewall. This will provide sufficient clearance to allow for tire distortion and axle walk.

Example: 3″ Jounce
+1″ Clearance for the "HT" Series and INTRAAX model
4″ of space required above the tire at ride height.

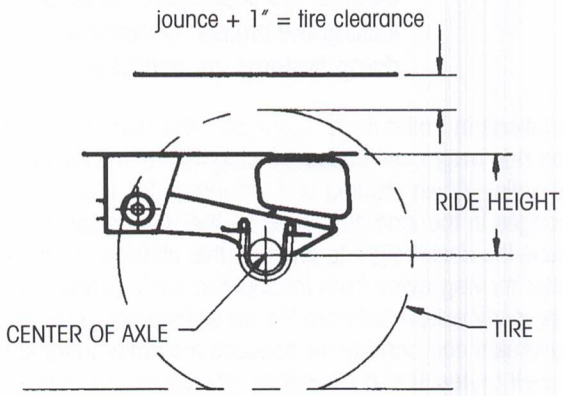

Figure 7. Tire clearance

The top dimensions in Figure 8 are for 35-inch suspension beam centers. The bottom dimensions (in parentheses) are for 41-inch suspension beam centers.

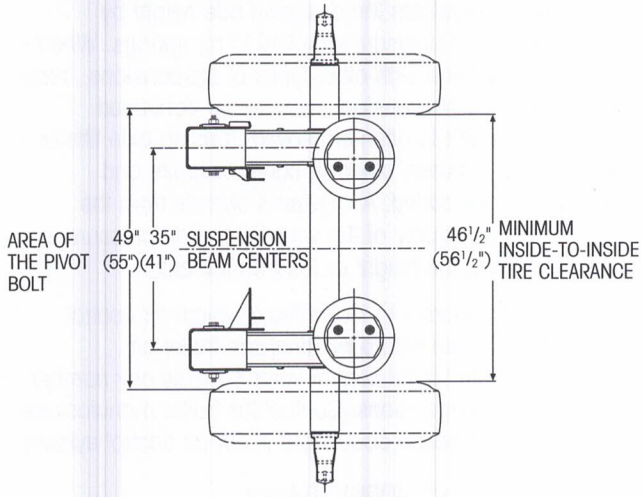

Figure 8. Inside-to-inside tire measurements

If the potential exists for tire interference, install the QUIK-ALIGN shear-type pivot bolt from the outboard side of the frame bracket.

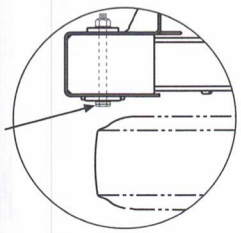

Figure 9. Alternative installation of the QUIK-ALIGN pivot bolt

CENTER LIFT SUSPENSIONS

Hendrickson offers center lift kits, which when added during a trailer suspension installation, provide a lifting capability (Figure 10). Only those suspensions with a minimum of 4″ of jounce are approved for use with a center lift kit.

Hendrickson's suspension jounce dimension includes an allowance for air spring bumper compression. As a result, the amount of lifted up travel will be less than the jounce.

The suspension lift distance indicates the amount of axle up travel. The resulting clearance under the tire will vary depending on both frame and tire deflection.

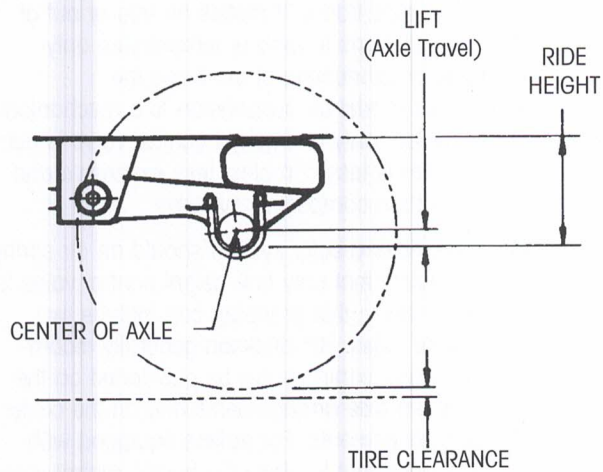

Figure 10. Center lift suspension

AIR CONTROL SYSTEM

Many types of air controls are available for Hendrickson trailer air suspensions. The most common system automatically regulates the designed ride height by controlling the air pressure supplied to air springs. When used in conjunction with other types of suspensions, such as a leaf-spring suspension, an operator-controlled pressure regulator is often employed. If using axle lifts or other special features, other air control circuits and components are added. All systems operate from the compressed air supply of the vehicle. The air pressure in springs controls the height or load on the axle.

The diagram (Figure 11) illustrates a typical air control arrangement in use with a Hendrickson trailer air suspension. One height control valve controls any number of primary air suspensions. Contact the trailer manufacturer for specific information about your trailer air control system.

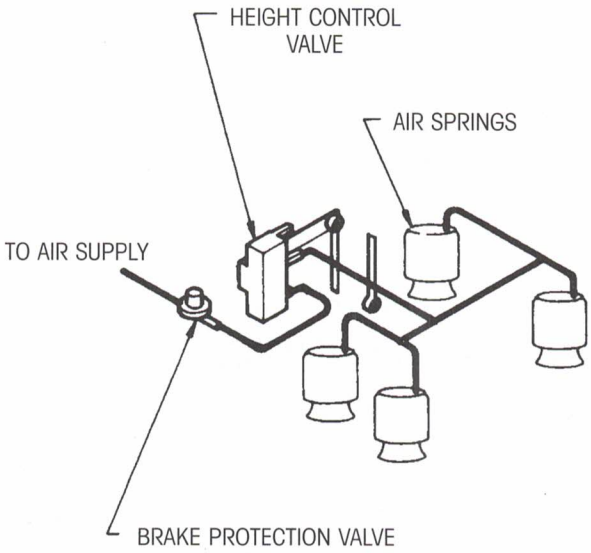

Figure 11. Height Control Valve

HEIGHT CONTROL VALVE

The height control valve on the Hendrickson trailer air suspension automatically responds to the relative position of the axle and vehicle frame. It meters air into or out of the air springs. Variations in load or temperature only affect the adding or exhausting of air. Since the Hendrickson trailer model air suspension is a mechanically stable suspension, only one height control valve is necessary. This system is less complex, less expensive and less troublesome than competitive systems.

In addition, it provides a safer system should an air spring blowout occur. Notice that only one height control valve is used per trailer or dolly; this grouping can include two, three, four or more axles. Hendrickson generally recommends that the height control valve be positioned on the rear axle on tandem axle arrangements and on the center axle of tri-axle arrangements. For trailers equipped with SURELOK®, it is important to place the height control valve on the same axle as the SURELOK locking legs.

When the actuating lever of the height control valve moves up, the valve opens and connects the air supply to the air spring. When the actuating lever moves down, the valve shuts off the air supply and opens the exhaust port to vent excess air from the air springs. A check valve prevents the loss of air spring pressure if the air supply fails. In the central position, air does not flow in or out of the air springs.

AIR DUMP VALVES

Air dump (or exhaust) valves increase stability during the loading and unloading of the trailer, as well as prolong component life. The valves can be controlled automatically, manually or by the use of an air-pilot valve.

When suspension air is exhausted, Hendrickson trailer air suspensions limit the suspension up travel (jounce) by a rubber bumper located inside the air spring. The air-spring bumpers adequately support the rated suspension capacity with the suspension air exhausted.

Hendrickson approves using air dump valves only when the control exhausts all the trailer air springs. Also, use of the air dump control is approved for the following situations:

- A trailer parked for any length of time, loaded or unloaded, either when connected to the tractor or supported by the landing gear legs.
- A trailer being loaded or unloaded, particularly when fork lift trucks are used.
- A dump trailer during the dump mode only.
- A trailer experiencing a sudden off loading of cargo, such as steel removed with a crane.

Any variation beyond these conditions must be approved in writing by Hendrickson Applications Engineering Department.

⚠ **CAUTION: Due to the geometry of all trailing-beam air suspensions, the trailer moves forward when air exhausts from the suspension and trailer brakes are locked. When supported by the trailer's landing gear, this movement may damage or collapse the legs. Always exhaust the suspension air before locking the brakes. (Automatic air-dump systems are available.)**

Variations in trailer deck height and, therefore, the suspension ride height will cause the longitudinal movement of the trailer. When loading and unloading the trailer, the changes in the load supported by the suspension will cause the deck height to change; this change results in the trailer moving away from the loading dock. Unless the air is properly exhausted from the air suspension, the above movement can damage or collapse the trailer landing gear, as well as result in a potentially dangerous gap between the trailer and the loading dock.

PERIODIC INSPECTION SCHEDULE

The Hendrickson trailer air suspension requires very little attention. Your air suspension may well last the life of the vehicle by using the information in this publication and other Hendrickson technical publications.

ORIGINAL-INSTALLATION INSPECTIONS

The vehicle manufacturer is responsible for completing the installation to Hendrickson specifications. In your review of the vehicle for the first time, check the following:

- trailer is level
- all welds are of acceptable quality
- all bolts are in place and secure
- pivot-connection nut tack-welded to bolt threads (not required with a "Huck" fastener)
- no component interferences exist

DAILY INSPECTIONS

A quick look to verify a level trailer that is riding at the correct ride height is suggested. This inspection will help you find any obvious problems. A closer inspection can detect broken or loose parts before any serious problems appear.

30-DAY INSPECTION

At 30 days, inspect clearances around air springs, tires, shock absorbers and all other moving parts. Evidence of part interference requires immediate attention by a qualified mechanic. The 30-day inspection includes the following checks:

- bolts are secure
- axle connections are tight
- any sign of wear

If you have any questions about the suspension area, call the trailer manufacturer or Hendrickson Technical Service Department at +61 3 8792 3600.

90-DAY INSPECTION

At 90 days, thoroughly check all items that were inspected at 30 days. The 90-day inspection also includes these items:

- all welded connections for signs of deterioration
- frame attachment joints, crossmember structures and all pivoting and clamping connections for problems

Early detection and correction of problems can save expenses and prolong the life of your trailer.

It is unlikely that you will find any problems with your Hendrickson air suspension during these inspections. However, your careful attention to these periodic inspections can save a great deal of time and expenses by avoiding unexpected difficulties in remote locations. Contact your Hendrickson representative or the Hendrickson Applications Engineering Department at +61 3 8792 3600 to discuss any questions about the construction and/or operation of your Hendrickson trailer air suspension.

QUIK-ALIGN® INSPECTION

Inspection of the QUIK-ALIGN occurs at 3,000 miles and at every lining change.

WHEEL END MAINTENANCE

7,500 MILES

Visually inspect seal and hub cap for leakages and hub oil level (if oil bath type).

12 MONTHS OR 100,000 MILES

At 12 months or 100,000 miles, which ever occurs first, visually inspect seal and R&I hub cap. Visually inspect for contaminants, check wheel bearing adjustment, install new oil, if oil filled, and replace hub cap gasket-retorque. Repair if necessary.

SUSPENSION SYSTEMS MAINTENANCE

By correcting minor problems when found, your Hendrickson air suspension will provide excellent service throughout your trailer's life. This section will help you to determine what to expect from your suspension components and the proper maintenance procedures.

RIDE HEIGHT ADJUSTMENT

1. Connect the vehicle to a compressed air supply with approximately the pressure of the normal supply system.
2. Ensure the inflation of the air springs.
3. Measure the ride height by using this method:

   a. Measure from the underside of the trailer frame to the top of the axle

   b. Add 2 1/2" (half the diameter of the axle) to the measurement

   Example: 11 1/2" to the top of the axle with the 2 1/2" equals a 14" ride height
4. Raise or lower the trailer as necessary, so it is at the designed ride height.
5. Once the trailer is set at the correct designed ride height, set the HCV lever to the neutral (central) position.
6. Adjust the HCV linkage to fit between HCV lever and lower linkage attachment.

IMPORTANT: When adjusting the height control valve, block the tire and release the trailer brakes. The axle must rotate freely to avoid a false reading.

Some height control valves have very small openings and a time delay of as much as 15 seconds. Allow sufficient time for the system to react to the adjustment. The response time will appear to be lengthy, but be patient.

Once set to the designed ride height, test drive the trailer. After the test drive, check the ride height to assure an accurate adjustment.

Notice that the use of one height control valve removes the requirement for synchronization found with most other air suspension systems. This feature will save you time and expense in servicing your air system.

If you have any questions regarding the operation of your Hendrickson trailer air system, contact the Hendrickson Technical Service at +61 3 8792 3600.

AIR SPRING

Air springs will last almost indefinitely in most applications. However, air springs will fail quickly when rubbed, scuffed, or punctured. If an air spring fails, the trailer will settle on the internal rubber bumpers, so you can proceed to the nearest service facility at a lower speed. You should try to determine the cause of a failure, so you can avoid a costly repeat of the problem. If you have questions about the cause of a failure, contact Hendrickson Technical Service Department at +61 3 8792 3600.

To replace an air spring, follow these steps:

1. Exhaust all air from the suspension system
2. Raise and support the vehicle in a safe manner
3. Unbolt the air spring
4. Disconnect air-supply lines
5. Replace the air spring
6. Bolt the air spring in place
7. Connect the air-supply lines
8. Lower the trailer to the ground
9. Supply air to the suspension system

SHOCK ABSORBER

Shock absorbers do not absorb shock; they absorb energy to prevent suspension oscillation. Shock absorbers are also used as rebound stops in most air suspensions. The shock absorber limits the stroke of an air spring, which prevents the air spring from being pulled apart. In some severe service applications, a shock strap is added to additionally aid in limiting the stroke of an air spring.

To remove an air spring, follow these steps:

1. Remove the end fasteners
2. Insert the new shock absorber
3. Secure with correct size locknut and bolts
4. Torque fasteners to specification

If your suspension has unique travel requirements, use only Hendrickson shock absorbers for replacements.

⚠ **CAUTION: Do not lift the trailer without the shock absorbers in place. If shock absorbers are not in place, overextension of the air springs will occur. Damage may occur to the overextended air springs.**

IMPORTANT: Hendrickson trailer air suspension design requires the use of specific air springs and shock absorbers. Only components purchased from Hendrickson or a Hendrickson-approved distributor can be used. Replacement with other components may cause premature failures and void the warranty.

PIVOT CONNECTION

A correct pivot connection is crucial to the life of the suspension. The pivot fastener must continually provide a sufficient clamp load through the bushing to prevent premature suspension failure.

Hendrickson trailer air suspension models come equipped with either a "Huck"-type fastener or a conventional nut-and-bolt arrangement at this location.

The factory installs the "Huck"-type fastener by using specialized hydraulic equipment. This fastener can only be removed by cutting the fastener apart.

Other factory-installed units are equipped with a nut and bolt at the pivot connection. This arrangement is also used when a field replacement is necessary. The pivot bolts are torqued to 800 ft-lbs. The nut is tack welded to the bolt threads to assure a permanent connection.

Hendrickson INTRAAX suspension systems come equipped with QUIK-ALIGN pivot connection hardware. The hardware consists of a specially plated shear bolt to ensure a proper clamp load, (550 ft-lbs, H-45 torque).

⚠ **CAUTION: Failure to properly torque the pivot bolt or tack weld the pivot nut to the bolt will result in loss of warranty coverage.**

TRI-FUNCTIONAL BUSHING

Hendrickson's TRI-FUNCTIONAL BUSHING has unique properties that will provide years of maintenance-free service. The TRI-FUNCTIONAL BUSHING (located at the suspension pivot) provides a resilient connection that allows an axle to walk without excessive flexing. The TRI-FUNCTIONAL BUSHING, in conjunction with the rigid axle connection, results in a roll-stable suspension design that resists trailer lean independent of the air spring loading.

There are times when a problem seemingly in the area of the suspension is diagnosed as a failed bushing. Closer inspection typically reveals another component or a faulty installation is the problem. If a problem is in the area of the suspension, refer to the TROUBLESHOOTING section on page 10. If a failed bushing is present, contact Hendrickson Technical Service Department at +61 3 8792-3600.

Rebushing of a suspension requires the use of a bushing removal/installation tool and bushing kit, containing the required components for rebushing. Contact Hendrickson for assistance. When rebushing the suspension, refer to *L427 Bushing Replacement Procedures.*

IMPORTANT: Literature is also available for installing the TRI-FUNCTIONAL BUSHING. Rebush using only the lubricant supplied in the bushing kit by Hendrickson Trailer Suspension Systems.

TROUBLESHOOTING: TRI-FUNCTIONAL BUSHING

COMMONLY MISDIAGNOSED BUSHING PROBLEMS

While the following problems can result from a failed bushing, most often they are the result of the items listed below.

PROBLEM	CAUSE(S)	SOLUTION(S)
TRAILER LEANS...		
Constantly in one direction.	Suspension beams installed out of parallel.	Determine which beam is out of parallel, cut from axle, reposition and reweld.
Varies from side to side.	Axle welds missing or broken.	**HT Models Only:** Clear away old welds, reposition the beams to be parallel and reweld to axle.
		INTRAAX Only: Replace the axle/beam weldment with a HALF-TRAAX unit.
Varies in one direction.	Pivot bushing failed.	Replace pivot bushing.

PROBLEM	CAUSE(S)	SOLUTION(S)
TRAILER "DOG TRACKS"...		
Constantly to one side.	Trailer frame not square, king pin excessively off center or high crown highways.	Realign suspension per Hendrickson Trailer Suspension Systems and bias the alignment of both axles equally in opposite direction of the dog tracking.
Varies from side to side.	**HT Models Only:** Loose pivot bolts.	Replace alignment collars, pivot bolts, nuts, TRI-FUNCTIONAL BUSHING and any worn suspension components.
	HT Models Only: Missing or broken alignment collar welds.	Clear away failed welds and realign — welded style pivot connection.
	All Models: Alignment collars loose (QUIK-ALIGN pivot connection).	Replace pivot bolt kit. Realign the trailer.
To one side under load.	Suspension not square to the axle.	Contact Hendrickson Technical Service Department at +61 3 8792 3600.
	Air springs misaligned.	Compare the installation to the suspension drawing and reposition as required; contact Hendrickson Technical Service Department
	Failed pivot bushing (rare).	Replace the pivot bushing and realign per instructions; contact Hendrickson Technical Service Department at +61 3 8792 3600.

IMPORTANT: Contact Hendrickson Technical Service Department at +61 3 8792 3600 for assistance.

COMMONLY MISDIAGNOSED BUSHING PROBLEMS (CONTINUED)

PROBLEM	CAUSE(S)	SOLUTION(S)
BUSHING WALK		
The suspension beams have shifted from the center of the pivot bushings.	Suspension beams are out of parallel (vertically or longitudinally).	**HT Models Only:** Determine which beams are out of position, cut the affected beams from the axle, reposition and reweld. Rebush both suspension pivots and realign per instructions. **INTRAAX Only:** Replace the axle/beam weldment with a HALF-TRAAX unit.
	Alignment collars loose from QUIK-ALIGN pivot connection.	Inspect the suspension hanger, replace if necessary, rebush the suspension and realign according to instructions.
	Frame bracket centers do not match the suspension beam centers.	Contact Hendrickson Technical Service Department at +61 3 8792 3600 for correct installation dimensions. Reposition the incorrect components and rebush both suspension pivots.
	Use of improper bushing lubricant.	Rebush using only the lubricant supplied in the bushing kit by Hendrickson Trailer Suspension Systems.
Pivot can be moved vertically.	Normal travel.	No action is required.
Bushing protrudes from the bushing tube.	Faulty or worn bushing.	If excessive rubber protrudes from one end, then it can indicate a bushing walk condition. Replace the bushing if this condition is present.
Grooving or deforming of wear pads.	Excessively dirty environment (i.e., farming, construction, on-off highway applications or sever service applications). Faulty or worn bushing	The wear pads act as filler pieces between the hanger and the bushing tube and bushing. The pads will show signs of wear due to the movement of the suspension beam during articulation. Replace pads if wear is excessive.

TORQUE SPECIFICATIONS

Use these torque specifications when installing the fasteners covered below.

COMPONENT DESCRIPTION	FT-LBS	N•m
QUIK-ALIGN Pivot Connection	505 to 595	685 to 807
Welded Pivot Connection (1 1/8 inches)	750 to 825	1017 to 1119
U-Bolts (HT Series)	475 to 525	644 to 712
Shock Bolts	210 to 235	285 to 319
Upper Air Spring Nuts	80 to 100	108 to 136
Lower Air Spring Nuts (HT Series)	40 to 50	54 to 68
Lower Air Spring Nuts (INTRAAX)	25 to 35	34 to 47
Brake Chamber Mounting Nut (INTRAAX)	100 to 110	136 to 149
S-Cam Support Bearing Mounting Nut (INTRAAX)	35 to 45	47 to 61

COMPONENT DESCRIPTION	IN-LBS	N•m
ABS Bracket Bolt and Nut (INTRAAX)	75 to 100	8 to 11
Dust Shield, Bolt-to-Spider (INTRAAX)	160 to 180	18 to 20
Dust Shield, Clamp-on (INTRAAX)	95 to 170	11 to 19

NOTE: Torque values are specified for the fasteners in the condition in which they are supplied by Hendrickson. **DO NOT APPLY ANY ADDITIONAL LUBRICANTS.**

⚠ **CAUTION: Overtorquing could result in fastener failure.**

HENDRICKSON®

Hendrickson Asia Pacific Pty Ltd
32-44 Letcon Drive, PO Box 1063
Dandenong South, Victoria 3175
Phone: 61 3 8792 3600
Fax: 61 3 8792 3699

The Boler Company
Copyright © 2000
All Rights Reserved